Suction Plates for High-Temperature SPL-HT FPM-F

Suction area (Ø) 90 mm to 190 mm

METAL GLASS

Suction Plates for High-Temperature SPL-HT FPM-F

Suitability for industry specific applications

Application

- Round suction plate for handling of very hot workpieces
- Removing of hot cathode ray tubes from molds
- Handling of hot glass

Design

- Robust and wear-resistant suction plate SPL-HT FPM-F with single sealing lip, consisting of replacement suction cup SPL and large-area metal mounting
- Suction plate screwed to mounting

Product highlights

- Fluorcaoutchuc FPM-F with felt coating is highly temperature-resistant (briefly up to 400 °C) and non-marking
- Suction cup screwed to the mounting and easily replaced when worn
- Large metal support ensures good heat dissipation and short cooling times

Designation code Suction Plates for High-Temperature SPL-HT FPM-F

SPL-HT	–	90	–	FPM-F-65	–	G1/4-AG
1		2		3		4

1 – Abbreviated designation

Code	Version
SPL-HT	Flat

2 – Suction area

Code	Diameter in mm
90…190	ø 90 to 190

3 – Material

Code	Material
FPM-F-65	Fluorcaoutchuc

4 – Connection

Code	Connection
G1/4-AG	G1/4-AG (AG = male (M))
G1/2-AG	G1/2-AG

Suction plate SPL-HT FPM-F (elastomer part + mounting) is delivered assembled. The product consists of:

- Suction plate of type SPL-HT FPM-F – available in various diameters
- Mounting – available with various threads

Available spare parts: suction plate SPL-HT FPM-F

© J. Schmalz GmbH / Reserve technical changes / generated on: 23.03.2025

Contact Schmalz: J. Schmalz GmbH, Johannes-Schmalz-Str. 1 • 72293 Glatten • +49 7443 2403-105 • kundencenter@schmalz.de

Suction Plates for High-Temperature SPL-HT FPM-F

Suction area (Ø) 90 mm to 190 mm

Ordering data Suction Plates for High-Temperature SPL-HT FPM-F

Type*	Part no.
SPL-HT 90 FPM-F-65 G1/4-AG	10.01.01.00551
SPL-HT 120 FPM-F-65 G1/4-AG	10.01.01.13438
SPL-HT 190 FPM-F-65 G1/2-AG	10.01.01.00832

*Additional material specifications at beginning of the section "Vacuum Suction Cups"

Ordering data Spare parts Suction Plates for High-Temperature SPL-HT FPM-F

Type*	Spare parts		Part no.
SPL-HT 90 FPM-F-65 G1/4-AG	Suction plate (round)	SPL-HT 90 FPM-F-65	10.01.01.00553
SPL-HT 120 FPM-F-65 G1/4-AG	Suction plate (round)	SPL-HT 120 FPM-F-65	10.01.01.13435
SPL-HT 190 FPM-F-65 G1/2-AG	Suction plate (round)	SPL-HT 190 FPM-F-65	10.01.01.00834

*Additional material specifications at beginning of the section "Vacuum Suction Cups"

Technical data Suction Plates for High-Temperature SPL-HT FPM-F

Type	Suction force (-600 mbar) [N]*	Volume [cm³]	Workpiece radius min. (convex) [mm]	Weight [g]
SPL-HT 90 FPM-F-65 G1/4-AG	230	92	250	225
SPL-HT 120 FPM-F-65 G1/4-AG	675	208	300	295
SPL-HT 190 FPM-F-65 G1/2-AG	1,050	165	350	1,420

*The specified suction forces are theoretical values at a vacuum of -0.6 bar and with a smooth, dry workpiece surface - they do not include a safety factor

Contact Schmalz: J. Schmalz GmbH, Johannes-Schmalz-Str. 1 • 72293 Glatten • +49 7443 2403-105 • kundencenter@schmalz.de

Suction Plates for High-Temperature SPL-HT FPM-F

Suction area (Ø) 90 mm to 190 mm

Design data Suction Plates for High-Temperature SPL-HT FPM-F

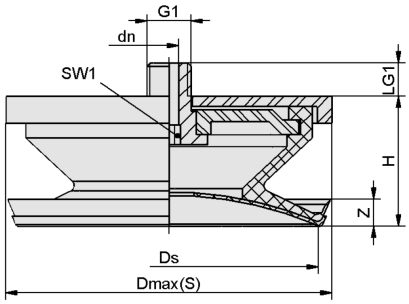

SPL-HT 90, 120 FPM-F

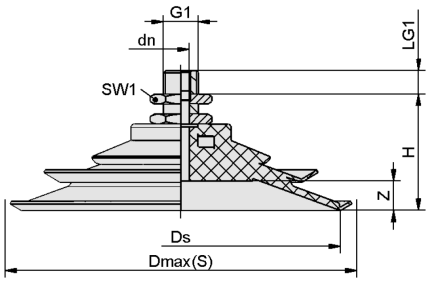

SPL-HT 190 FPM-F

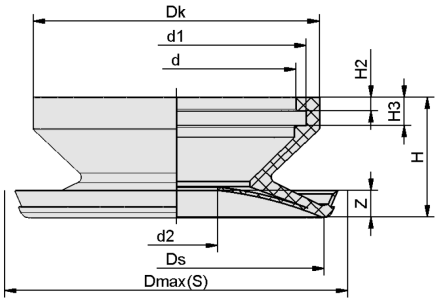

SPL-HT 90, 120 FPM-F

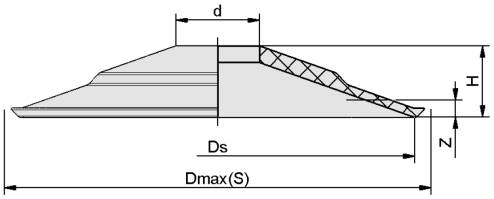

SPL-HT 190 FPM-F

Contact Schmalz: J. Schmalz GmbH, Johannes-Schmalz-Str. 1 • 72293 Glatten • +49 7443 2403-105 • kundencenter@schmalz.de

Suction Plates for High-Temperature SPL-HT FPM-F

Suction area (Ø) 90 mm to 190 mm

Design data Suction Plates for High-Temperature SPL-HT FPM-F

Type*	Dmax(S) [mm]**	dn [mm]	Ds [mm]	G1	H [mm]	LG1 [mm]	SW1 [mm]	Z (Stroke) [mm]
SPL-HT 90 FPM-F-65 G1/4-AG	98	6	90	G1/4"-M	39.0	11	6	16.5
SPL-HT 120 FPM-F-65 G1/4-AG	130	6	120	G1/4"-M	46.0	11	8	25.0
SPL-HT 190 FPM-F-65 G1/2-AG	209	10	190	G1/2"-M	66.0	18	32	8.0

*Acceptable dimensional tolerances for rubber parts concerning to DIN ISO 3302-1 E3
**External dimension of the suction cup when it is pressed against the workpiece by the vacuum

Type*		d [mm]	d1 [mm]	d2 [mm]	Dk [mm]	Dmax(S) [mm]**	Ds [mm]	H [mm]	H2 [mm]	H3 [mm]	Z (Stroke) [mm]
SPL-HT	90	72	78	4	86	98	90	36	4	9.5	16.5
SPL-HT	120	88	96	4	105	130	120	43	5	10.0	25.0
SPL-HT	190	40	-	-	-	209	190	17	-	-	8.0

*Acceptable dimensional tolerances for rubber parts concerning to DIN ISO 3302-1 E3
**External dimension of the suction cup when it is pressed against the workpiece by the vacuum

Contact Schmalz: J. Schmalz GmbH, Johannes-Schmalz-Str. 1 • 72293 Glatten • +49 7443 2403-105 • kundencenter@schmalz.de